CPA-24.AVY.ORG

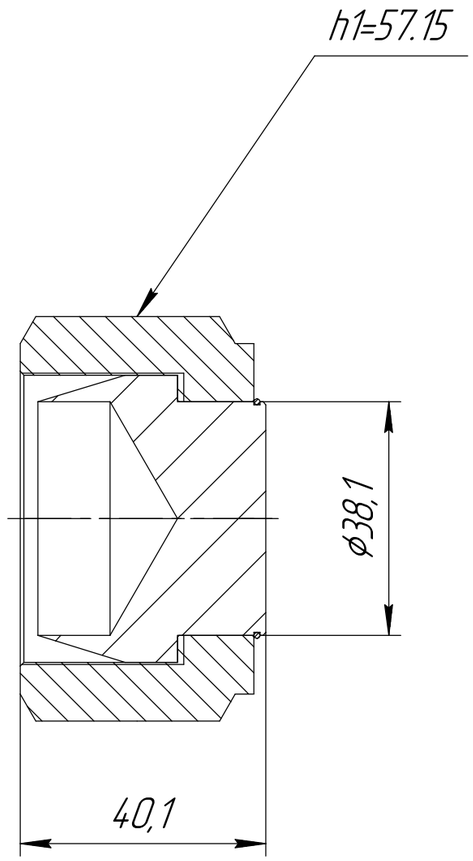

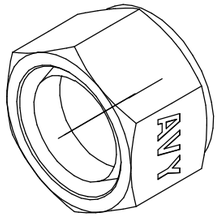

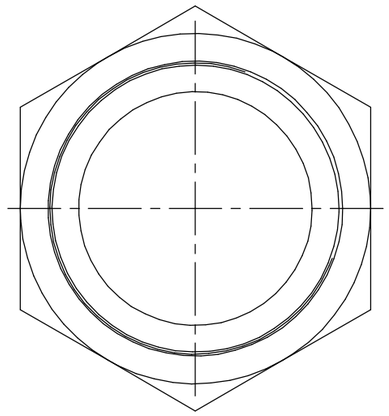

1. h1 –Hex size
2 Temperature rating from –196 to 649°C

					CPA-24.AVY.ORG		
Ch.	Sheet	№ doc.	Sign.	Date	Port plug for Hy-lok fitting	Char. / Weight	Scale 1:1
Develop.							
Checked							
Tech. contr.						Sheet	Sheets 1
Req. contr.						HY-LOK CORPORATION	
Approv.							

First mention | Reference № | Sign. and date | Inv. № copy | Exch. inv. № | Sign. and date | Inv. № orig.

Copied | Format A3