CPA-22M.AVY.ORG

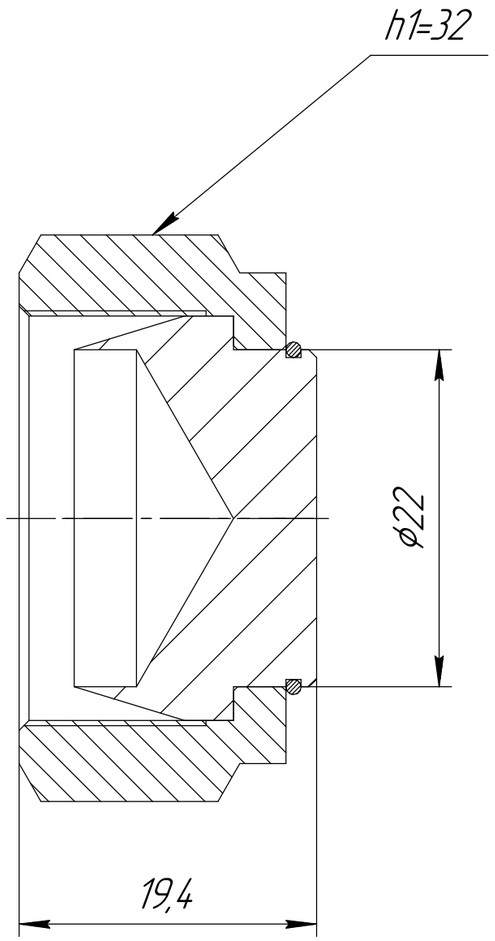


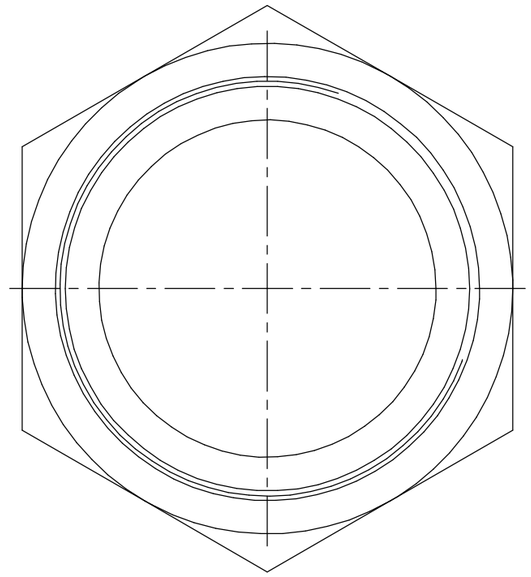

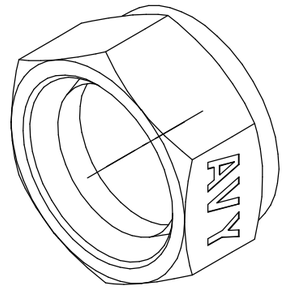


1. h1 –Hex size
2 Temperature rating from –196 to 649°C

| | | | | | | | |
|---|---|---|---|---|---|---|---|
| | | | | | CPA-22M.AVY.ORG | | |
| Ch. | Sheet | № doc. | Sign. | Date | Port plug for Hy-lok fitting | Char. / Weight | Scale 2.5:1 |
| Develop. | | | | | | | |
| Checked | | | | | | | |
| Tech. contr. | | | | | | Sheet | Sheets 1 |
| Reg. contr. | | | | | | HY-LOK CORPORATION | |
| Approv. | | | | | | | |

Copied

Format A3

First mention

Reference №

Sign. and date

Inv. № copy

Exch. inv. №

Sign. and date

Inv. № orig.