CAF-10-12R.AVY.ORG

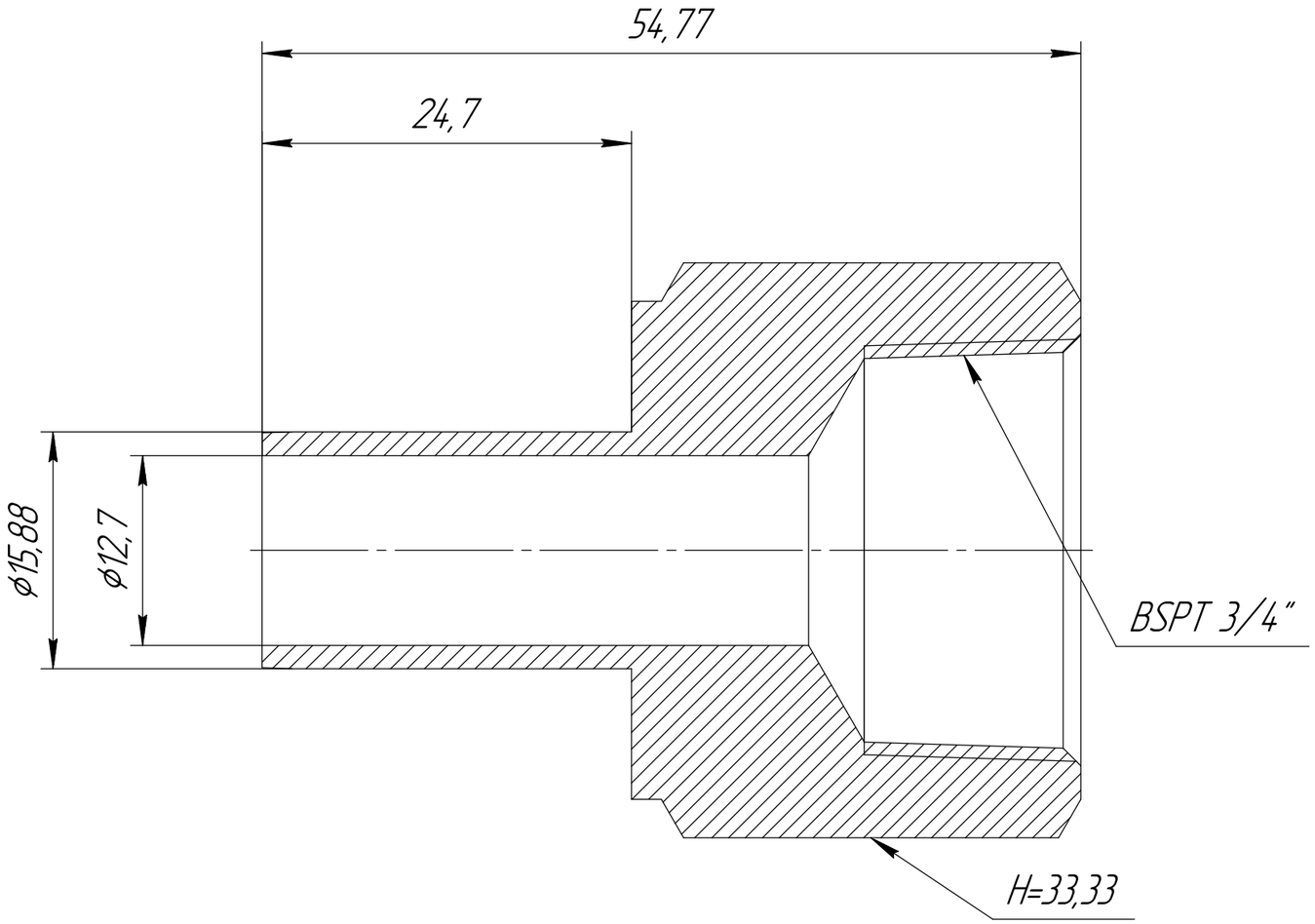

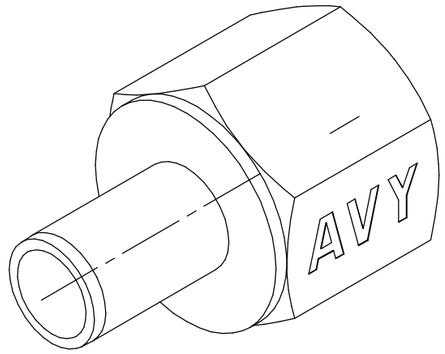

1. H – Hex size
2. *This size may depend on the degree of tightening
3 Temperature rating from –196 to 649°C

					CAF-10-12R.AVY.ORG			
Ch.	Sheet	№ doc.	Sign.	Date	Female Thread Adapter	Char.	Weight	Scale
Develop.								2.5:1
Checked						Sheet	Sheets 1	
Tech. contr.								
Req. contr.						HY-LOK CORPORATION		
Approv.								

First mention | Reference № | Sign. and date | Inv. № copy | Exch. inv. № | Sign. and date | Inv. № orig.

Copied

Format A3