CMC-10M-2N.AVY.ORG

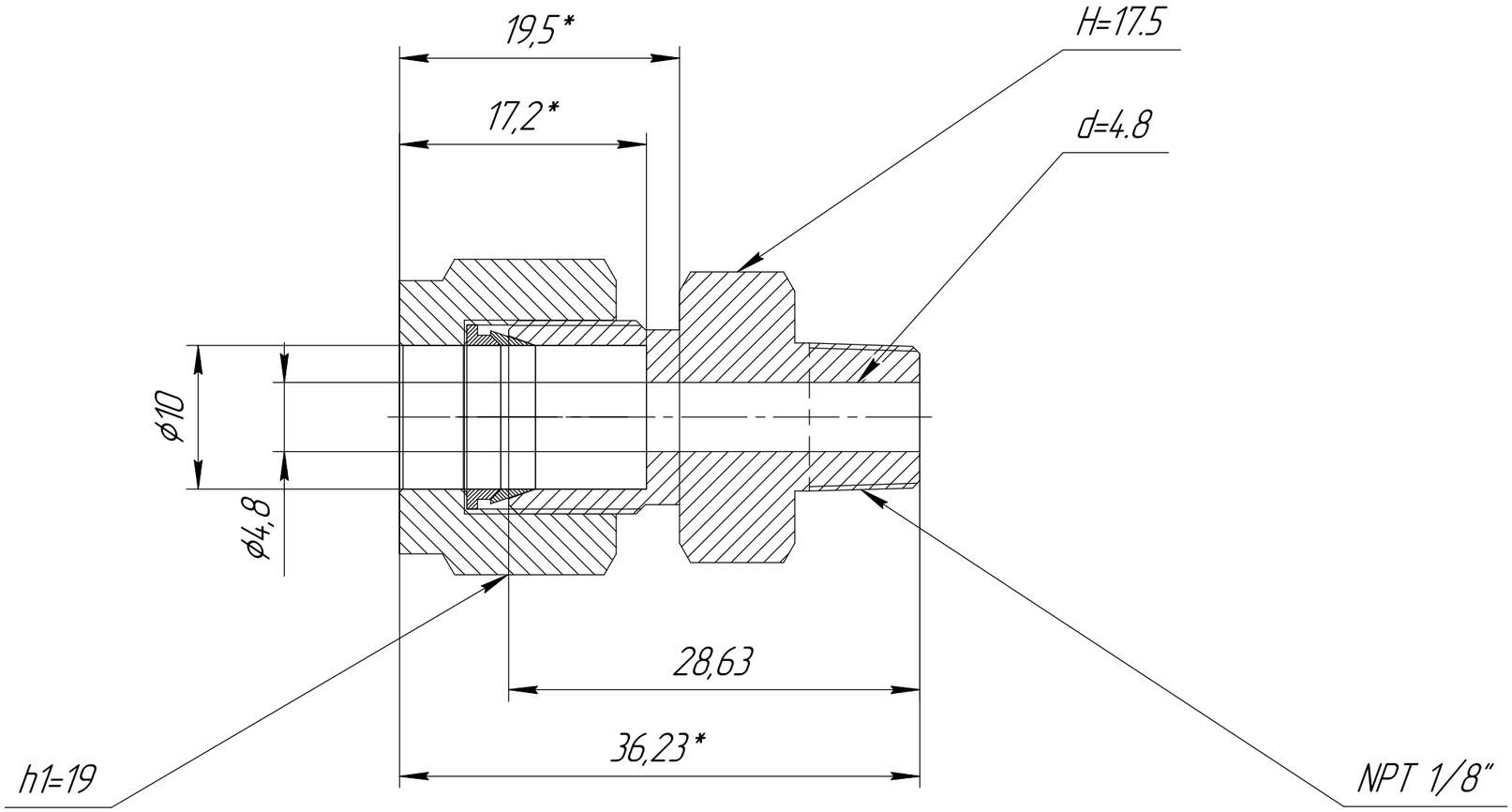


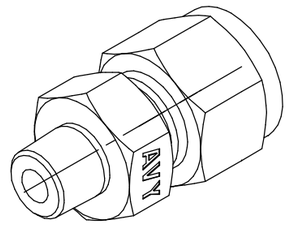

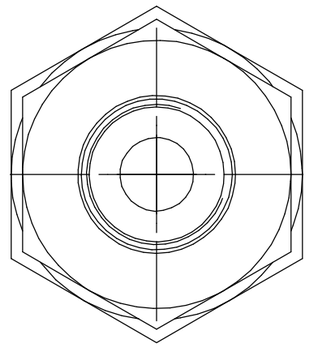

1. H and h1 – Hex sizes
2. *This size may depend on the degree of tightening
3 Temperature rating from –196 to 649°C

| | | | | | | | | |
|---|---|---|---|---|---|---|---|---|
| | | | | | CMC-10M-2N.AVY.ORG | | | |
| Ch. | Sheet | № doc. | Sign. | Date | Male Connector | Char. | Weight | Scale |
| Develop. | | | | | | | | 2.5:1 |
| Checked | | | | | | Sheet | Sheets 1 | |
| Tech. contr. | | | | | | | | |
| Reg. contr. | | | | | | HY-LOK CORPORATION | | |
| Approv. | | | | | | | | |

First mention | Reference № | Sign. and date | Inv. № copy | Exch. inv. № | Sign. and date | Inv. № orig.

Copied

Format A3