B3V-3-F-6R.AVY.ORG

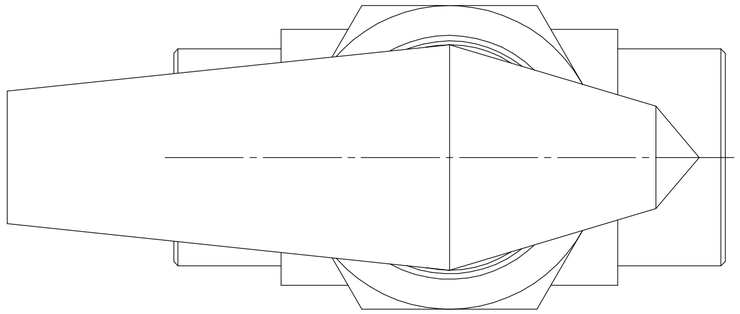

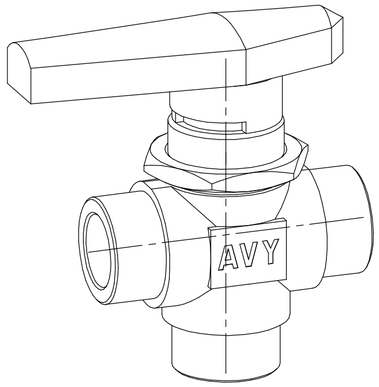

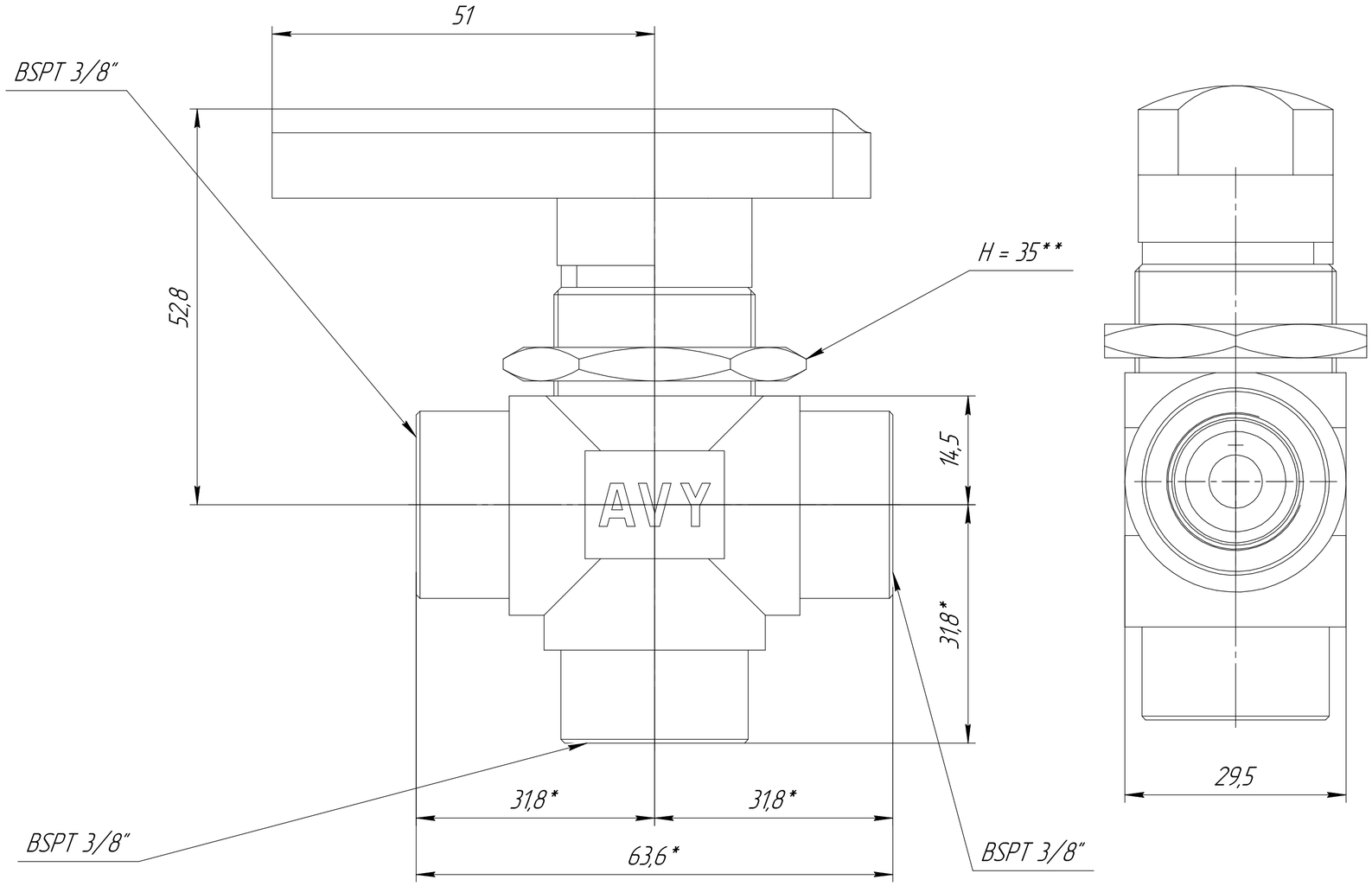

1. *This size may depend on the degree of tightening
2. ** Hex size
3 Pressure rating 103bar (T = 21 °C)
4 Temperature rating from 10 to 65°C

					B3V-3-F-6R.AVY.ORG		
Ch.	Sheet	№ doc.	Sign.	Date	Ball Valve	Char. / Weight	Scale 2:1
Develop.							
Checked							
Tech. contr.						Sheet	Sheets 1
Reg. contr.						HY-LOK CORPORATION	
Approv.							

Copied

Format A2

First mention | Reference № | Sign. and date | Inv. № copy | Exch. inv. № | Sign. and date | Inv. № orig.