H3B-F-16R-PK.AVY.ORG

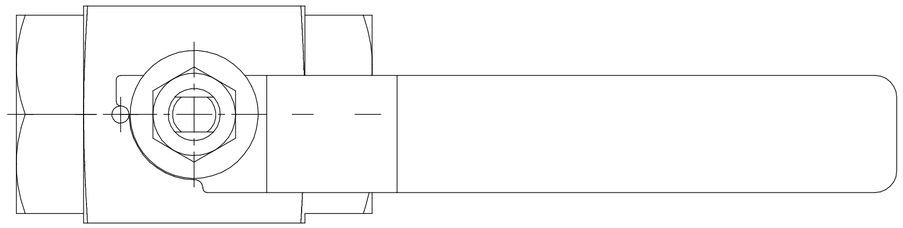

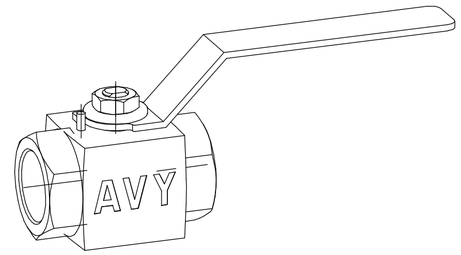

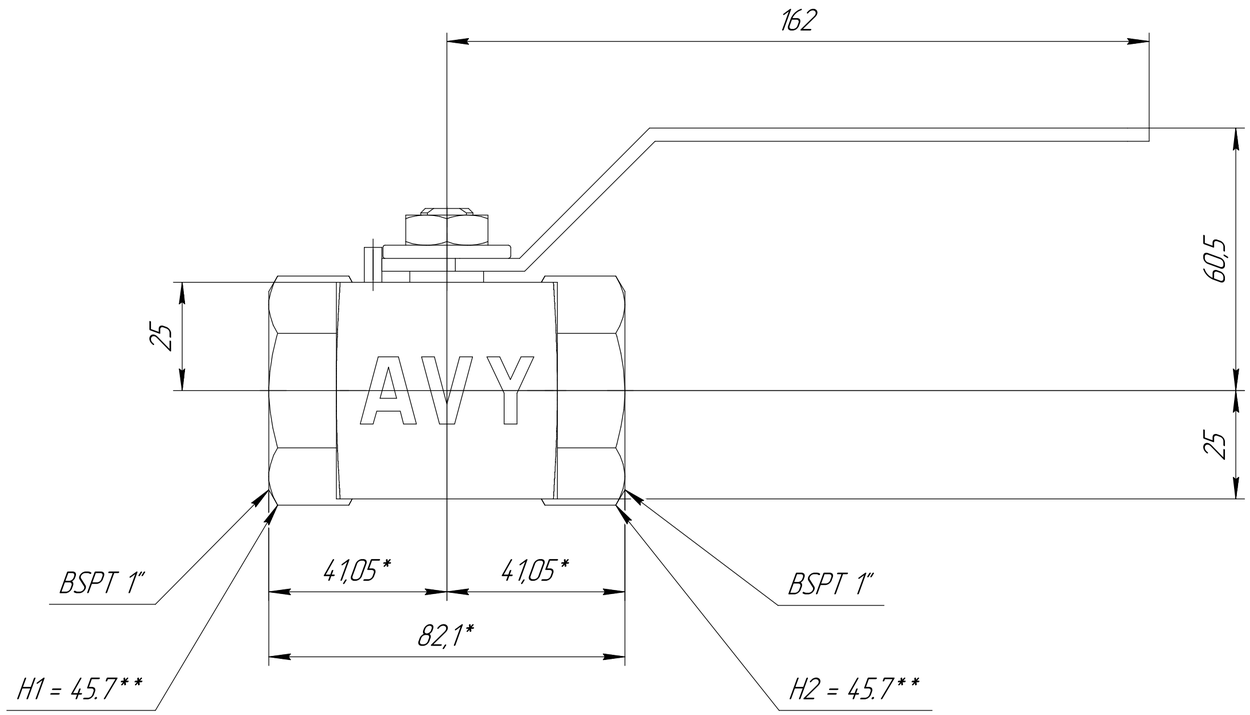

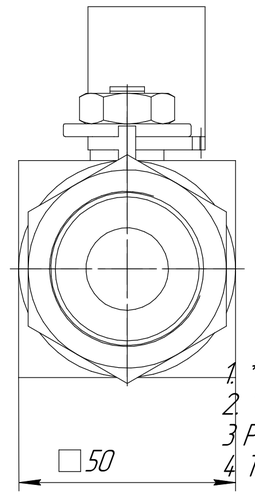

1. *This size may depend on the degree of tightening
2. ** Hex size
3. Pressure rating 410bar (T = 21 °C)
4. Temperature rating from -23 to 191°C

					H3B-F-16R-PK.AVY.ORG		
Ch.	Sheet	№ doc.	Sign.	Date	Ball Valve	Char. / Weight	Scale 1:1
Develop.							
Checked							
Tech. contr.						Sheet	Sheets 1
Reg. contr.						HY-LOK CORPORATION	
Approv.							

First mention | Reference № | Sign. and date | Inv. № copy | Exch. inv. № | Sign. and date | Inv. № orig.

Copied | Format A2