RV2-MF-4N-EP-E.AVY.ORG

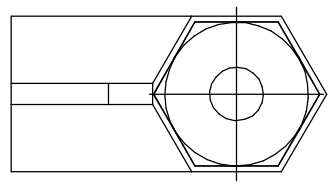

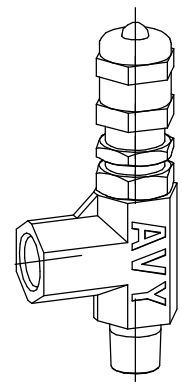

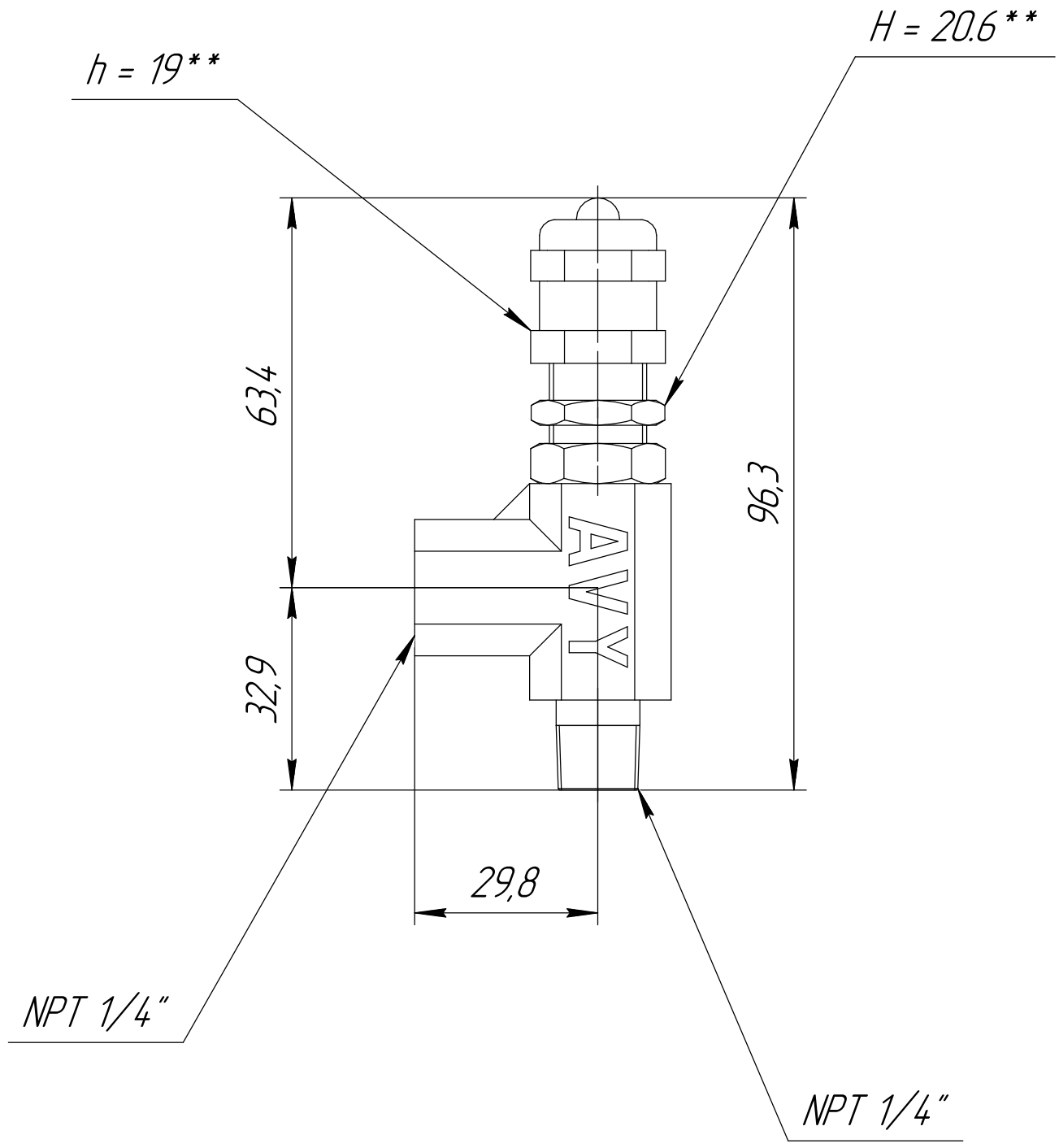

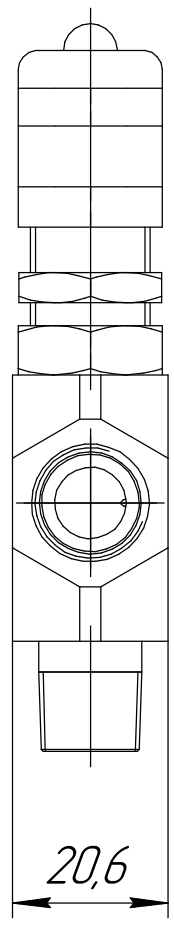

1. *This size may depend on the degree of tightening
2. ** Hex size
3 Temperature rating from -46 to 149°C

					RV2-MF-4N-EP-E.AVY.ORG		
			x				
			y				
Ch.	Sheet	№ doc.	Sign.	Date	Relief valve	Char. / Weight / Scale	1:1
Develop.						Sheet / Sheets	1
Checked							
Tech. contr.							
						HY-LOK CORPORATION	
Req. contr.							
Approv.							

First mention | Reference № | Sign. and date | Inv. № copy | Exch. inv. № | Sign. and date | Inv. № orig.

Copied

Format A3