RV2-H-8T-EP-D.AVY.ORG

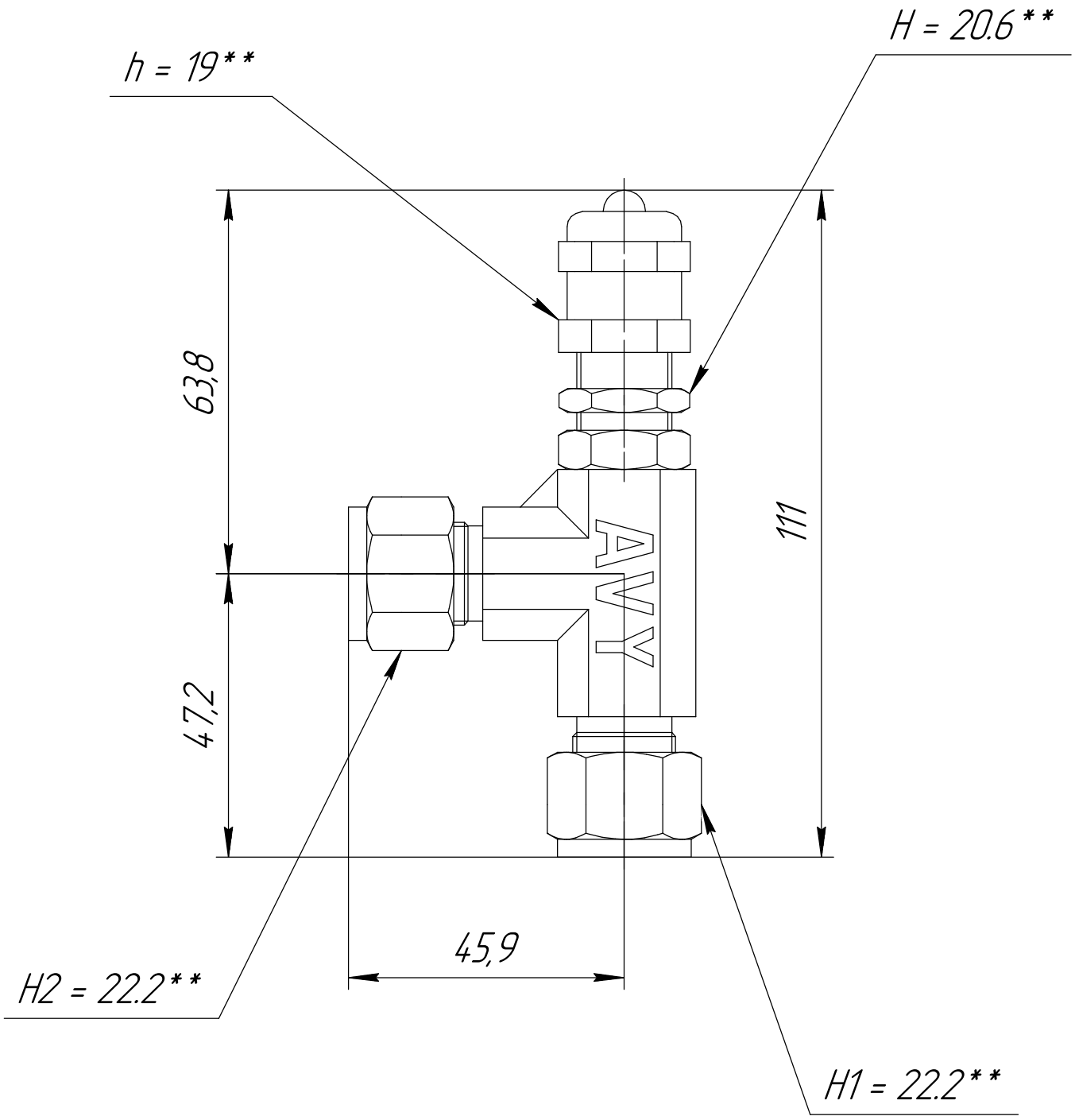

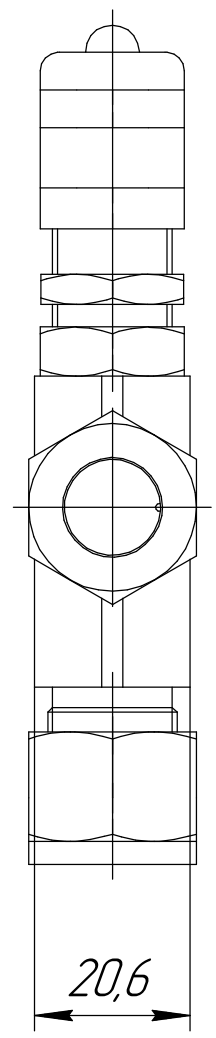

1. *This size may depend on the degree of tightening
2. ** Hex size
3 Temperature rating from -46 to 149°C

					RV2-H-8T-EP-D.AVY.ORG		
			x				
			y				
Ch.	Sheet	№ doc.	Sign.	Date	Relief valve	Char. / Weight / Scale	1:1
Develop.						Sheet / Sheets	1
Checked							
Tech. contr.							
						HY-LOK CORPORATION	
Reg. contr.							
Approv.							

First mention | Reference № | Sign. and date | Inv. № copy | Exch. inv. № | Sign. and date | Inv. № orig.

Copied | Format A3