SVH2-F-6N-G.AVY.ORG

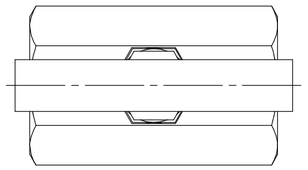

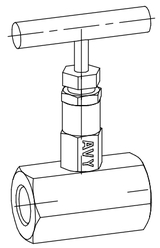

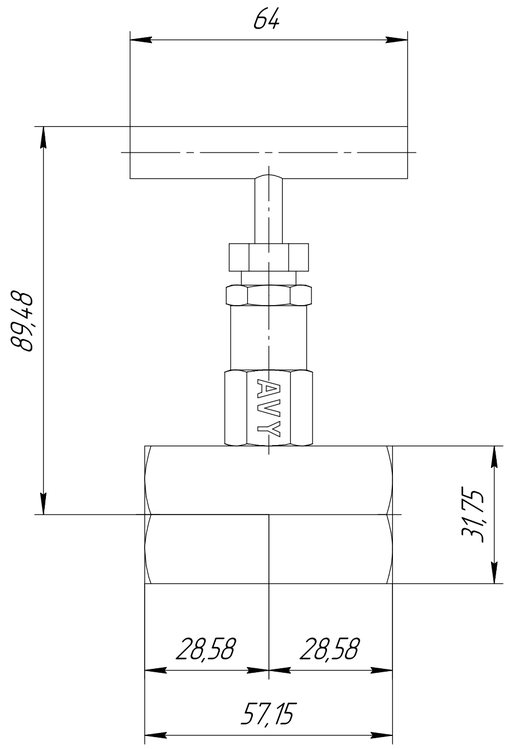

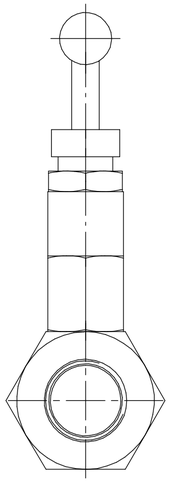

1 Pressure rating 414bar (T = 21 °C)
2 Temperature rating from -54 to 648°C

					SVH2-F-6N-G.AVY.ORG			
Ch.	Sheet	№ doc.	Sign.	Date	Needle valve	Char.	Weight	Scale 1:1
Develop.								
Checked								
Tech. contr.						Sheet	Sheets 1	
Reg. contr.					HY-LOK CORPORATION			
Approv.								

Copied

Format A2

First mention | Reference № | Sign. and date | Inv. № copy | Exch. inv. № | Sign. and date | Inv. № orig.