SVH1-F-12N.AVY.ORG

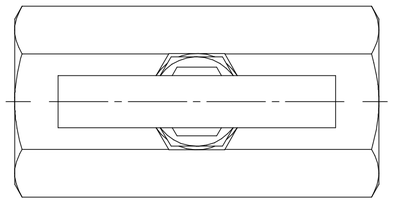

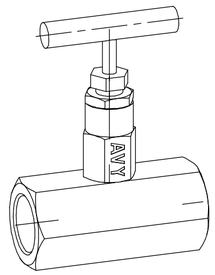


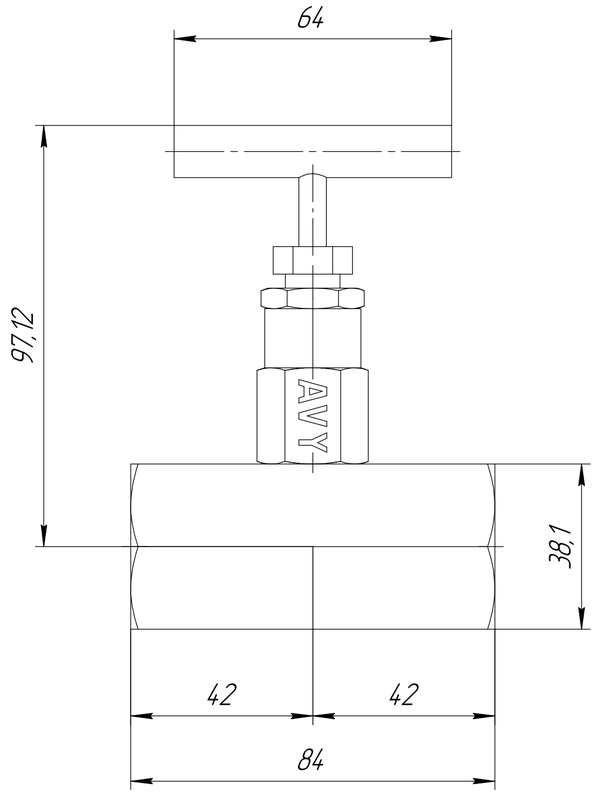


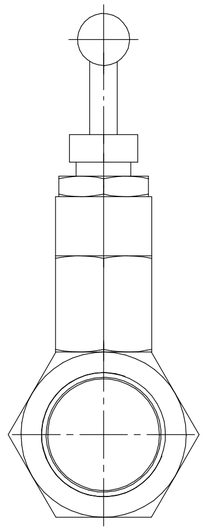

1 Pressure rating 690bar (T = 21 °C)
2 Temperature rating from -54 to 232°C

| | | | | | | | | |
|---|---|---|---|---|---|---|---|---|
| | | | | | SVH1-F-12N.AVY.ORG | | | |
| Ch. | Sheet | № doc. | Sign. | Date | Needle valve | Char. | Weight | Scale 1:1 |
| Develop. | | | | | | | | |
| Checked | | | | | | Sheet | Sheets 1 | |
| Tech. contr. | | | | | | | | |
| Reg. contr. | | | | | | HY-LOK CORPORATION | | |
| Approv. | | | | | | | | |

First mention

Reference № | Sign. and date | Inv. № copy | Exch. inv. № | Sign. and date | Inv. № orig.

Copied

Format A2