H-SLC-12N.AVY.ORG

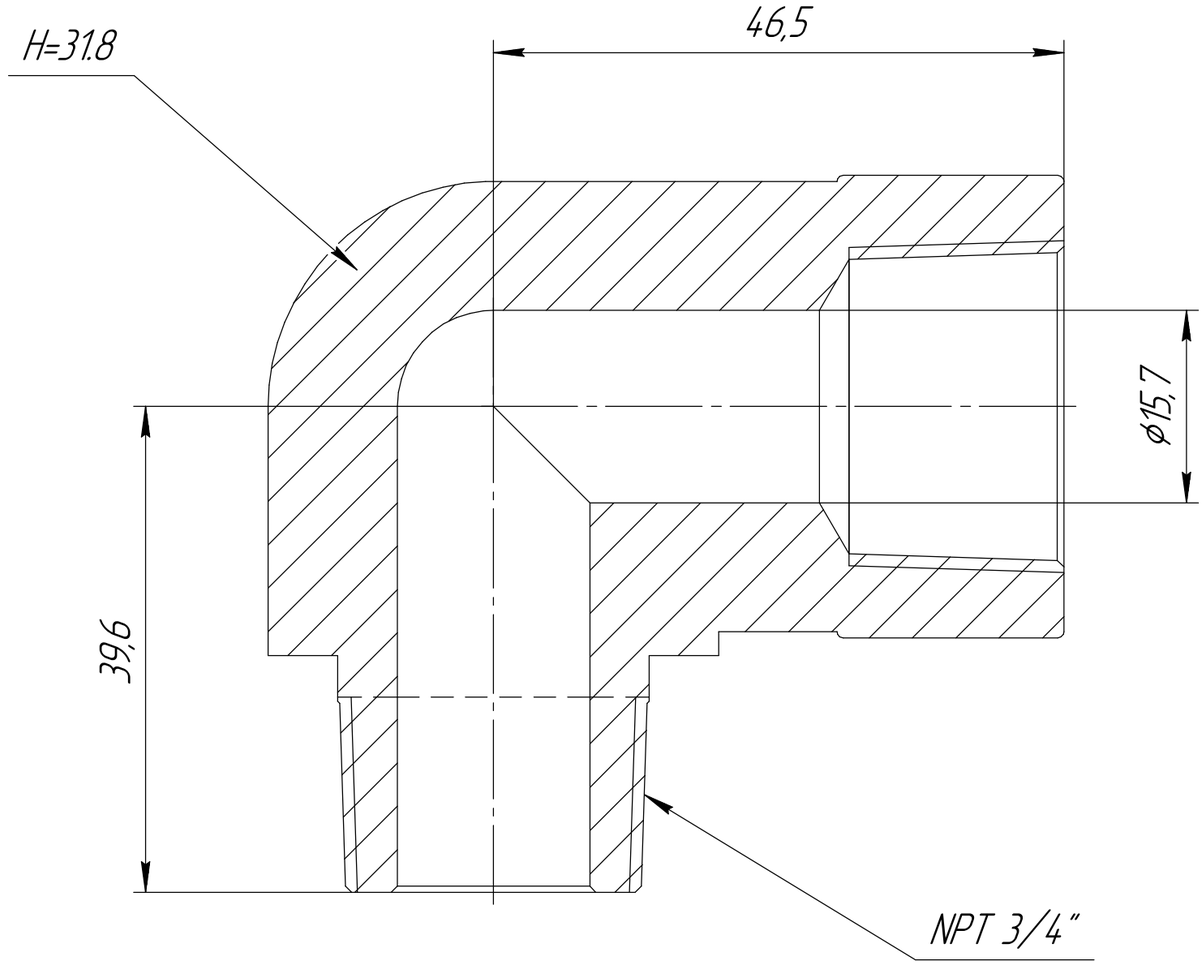

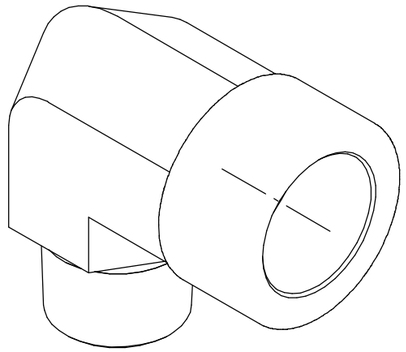

1. H – Hex size
2 Temperature rating from –196 to 649°C

Ch.	Sheet	№ doc.	Sign.	Date	
Develop.					
Checked					
Tech. contr.					
Req. contr.					
Approv.					

H-SLC-12N.AVY.ORG

Elbow male to female connector

Char.	Weight	Scale
		2:1
Sheet	Sheets 1	

HY-LOK CORPORATION

Copied

Format A3

First mention | Reference № | Sign. and date | Inv. № copy | Exch. inv. № | Sign. and date | Inv. № orig.