CAF-24-24R.AVY.ORG

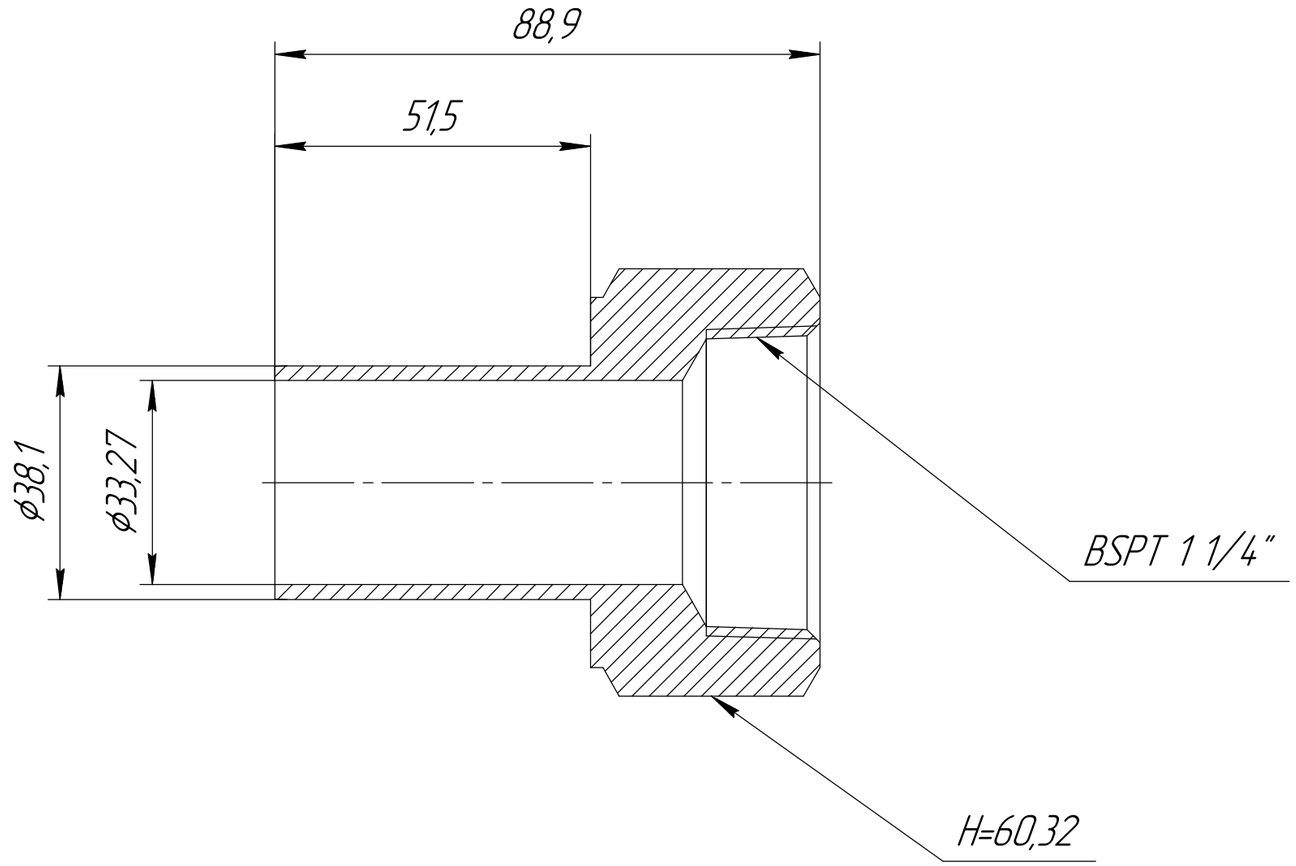

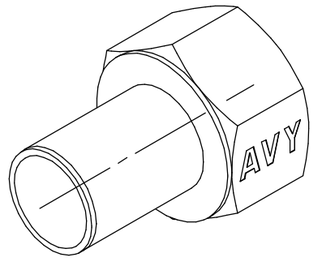

1. H – Hex size
2. *This size may depend on the degree of tightening
3 Temperature rating from –196 to 649°C

					CAF-24-24R.AVY.ORG		
Ch.	Sheet	№ doc.	Sign.	Date	Female Thread Adapter	Char. / Weight	Scale 1:1
Develop.							
Checked							
Tech. contr.						Sheet	Sheets 1
Req. contr.					HY-LOK CORPORATION		
Approv.							

First mention | Reference № | Sign. and date | Inv. № copy | Exch. inv. № | Sign. and date | Inv. № orig.

Copied | Format A3