B1V-H-4T.AVY.ORG

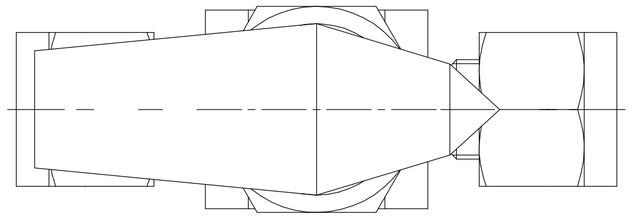

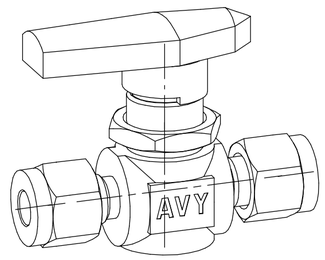

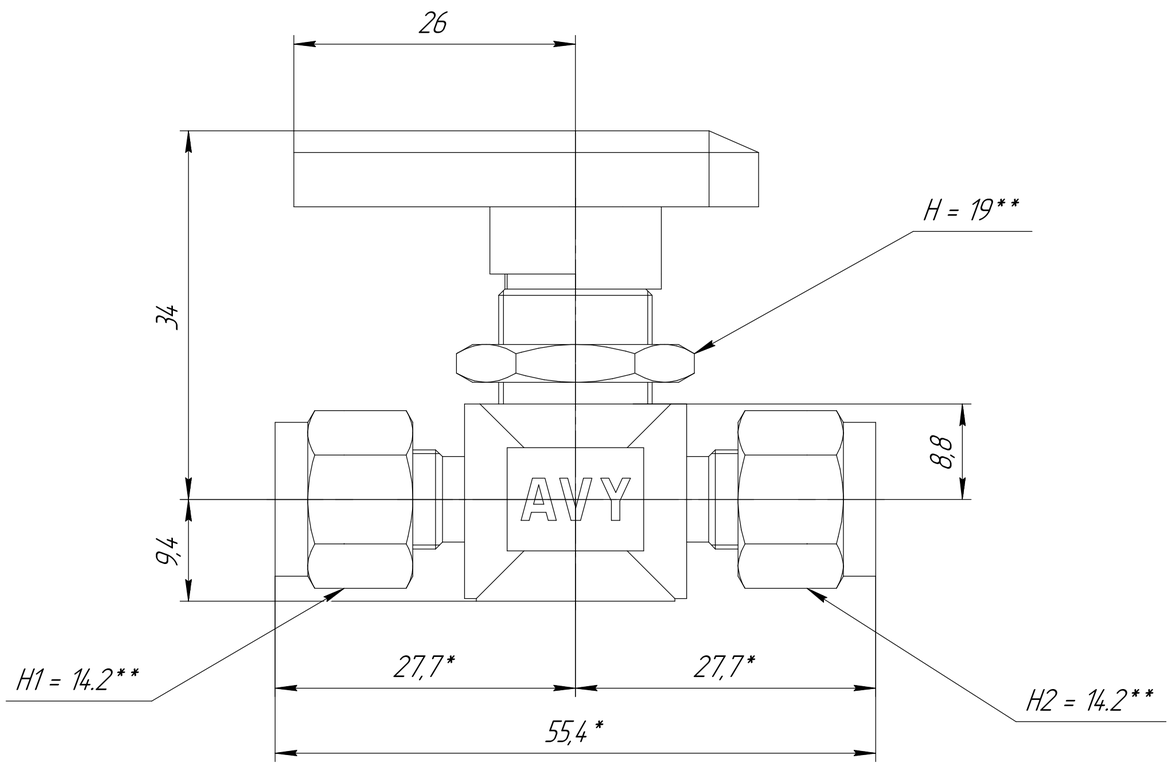

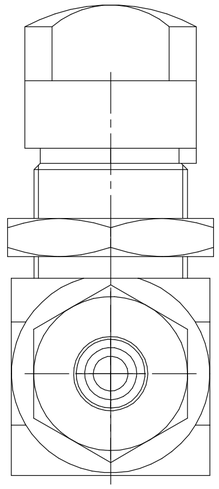

1. *This size may depend on the degree of tightening
2. ** Hex size
3 Pressure rating 172bar (T = 21 °C)
4 Temperature rating from 10 to 65°C

					B1V-H-4T.AVY.ORG		
Ch.	Sheet	№ doc.	Sign.	Date	Ball Valve	Char. / Weight	Scale 2.5:1
Develop.							
Checked						Sheet	Sheets 1
Tech. contr.							
Reg. contr.						HY-LOK CORPORATION	
Approv.							

First mention | Reference № | Sign. and date | Inv. № copy | Exch. inv. № | Sign. and date | Inv. № orig.

Copied | Format A2