CUA-20.AVY.ORG

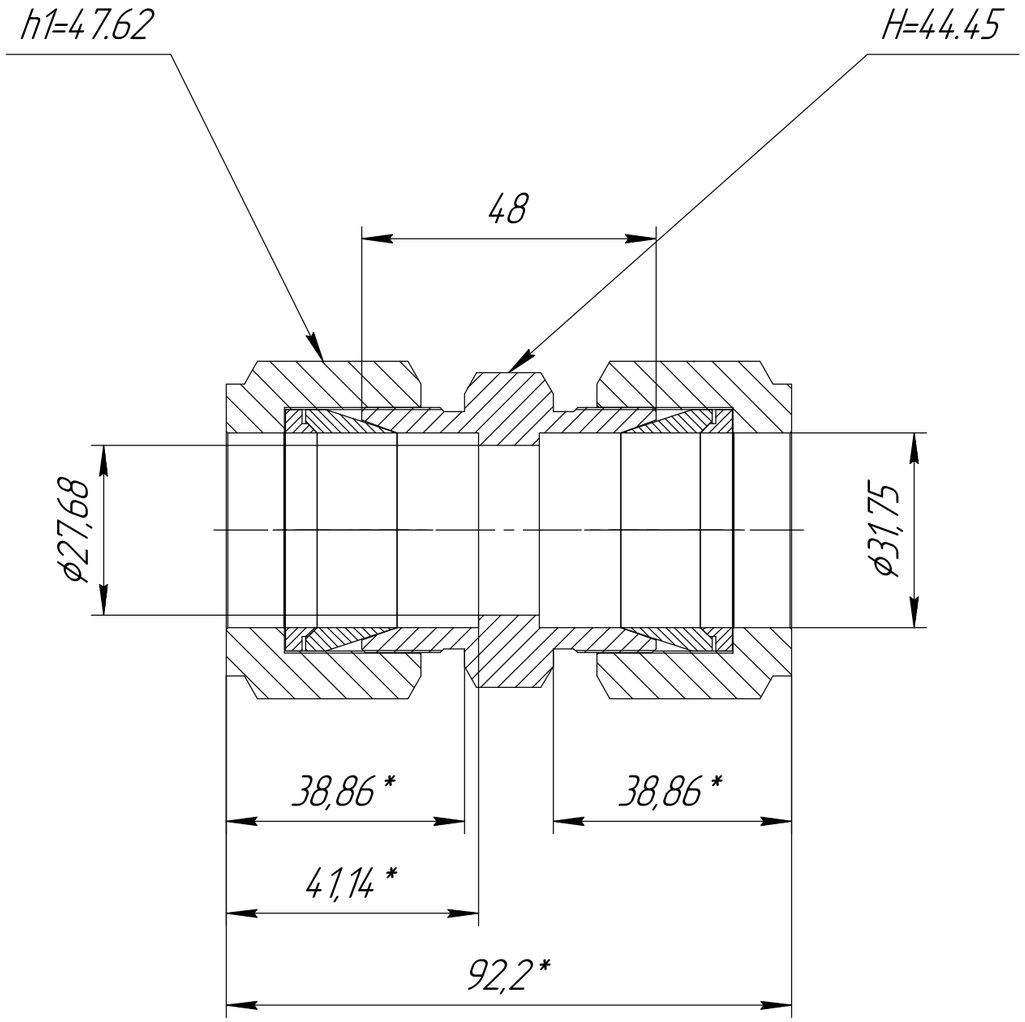

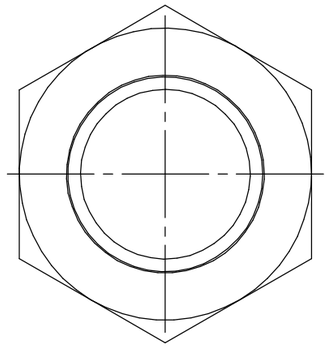

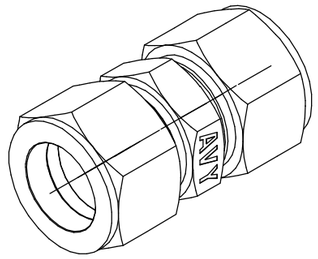

1. H and h1 – Hex sizes
2. *This size may depend on the degree of tightening
3 Temperature rating from –196 to 649°C

					CUA-20.AVY.ORG		
Ch.	Sheet	№ doc.	Sign.	Date	Union	Char. / Weight	Scale 1:1
Develop.							
Checked							
Tech. contr.						Sheet	Sheets 1
Req. contr.					HY-LOK CORPORATION		
Approv.							

Copied

Format A3

First mention

Reference №

Sign. and date

Inv. № copy

Exch. inv. №

Sign. and date

Inv. № orig.