CUA-12.AVY.ORG

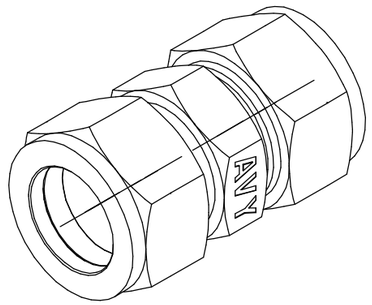

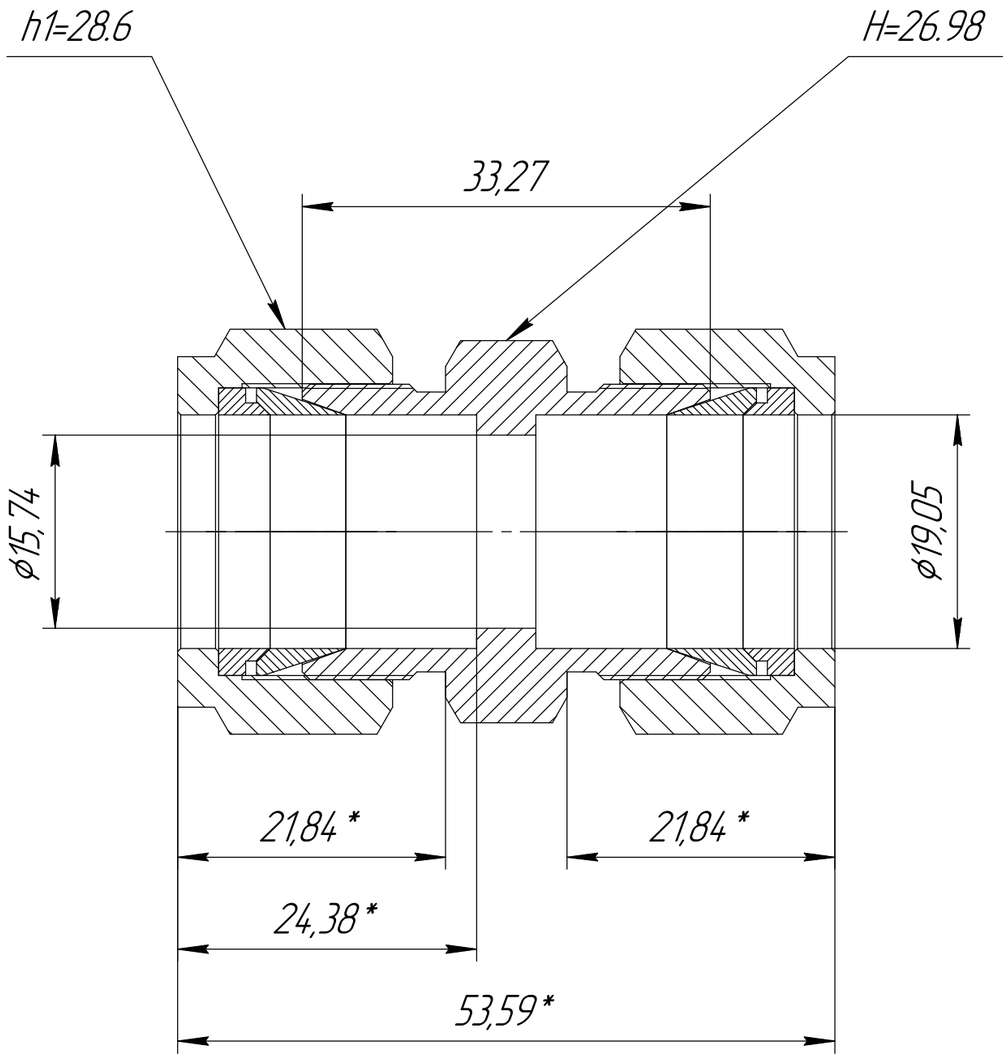

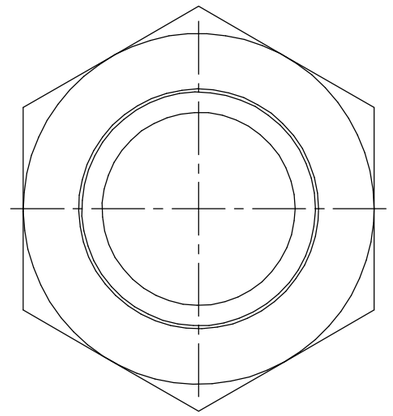

1. H and h1 – Hex sizes
2. *This size may depend on the degree of tightening
3 Temperature rating from –196 to 649°C

					CUA-12.AVY.ORG		
Ch.	Sheet	№ doc.	Sign.	Date	Union	Char. / Weight	Scale 2:1
Develop.							
Checked							
Tech. contr.						Sheet	Sheets 1
Reg. contr.						HY-LOK CORPORATION	
Approv.							

First mention | Reference № | Sign. and date | Inv. № copy | Exch. inv. № | Sign. and date | Inv. № orig.

Copied

Format A3